Kaiser & Kühne

play equipment **Actio 350**
item number **027350000**

product description (page 1)



Kaiser & Kühne

play equipment **Actio 350**
item number **027350000**

https://kaiser-kuehne.com/products/?lang=en

product data

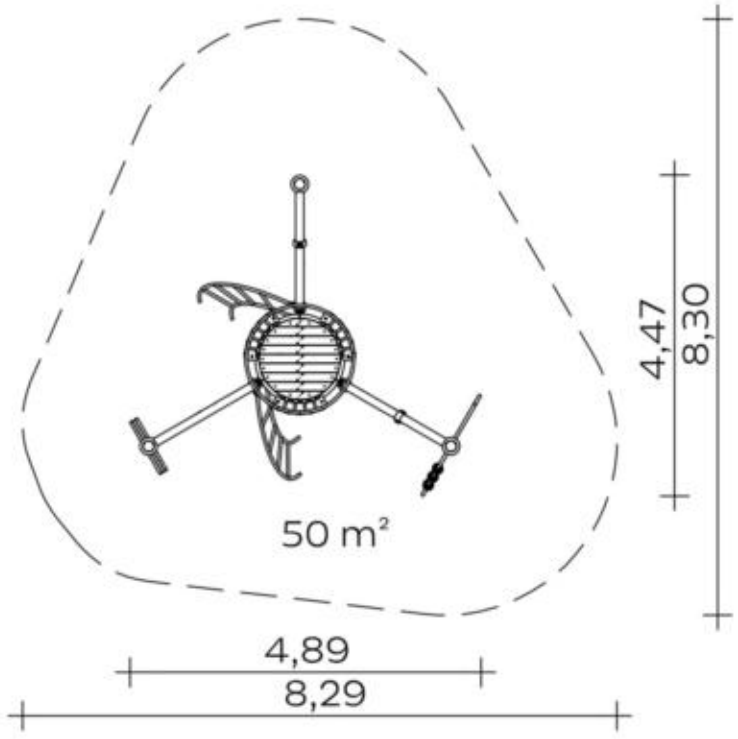

(without scale)

installation

play equipment [m]	l	4,89
	w	4,47
	h	2,93
minimum space [m]	l	8,30
	w	8,29
	h	2,93
impact area [m²]		50,00
free height of fall [m]		2,86
number of mechanics		3
assembly time [hrs]		5
lifting device		yes
single weight [kg]		115
total weight [kg]		550

foundations

l [m]	w [m]	h [m]	vol [m³]	qty
1,77	0,50	0,50	0,443	1
1,30	0,50	0,50	0,325	2
0,60	0,60	0,50	0,180	4
0,80	0,40	0,50	0,160	2
			2,133	9

usage

areas of use	public playgrounds
activities	
age groups	5+
number of users	21

inclusion

- Meeting opportunity
- Drama play
- Balancing
- Group games
- Altitude experience
- Coordination
- Parallel play

Kaiser & Kühne

play equipment **Actio 350**
item number **027350000**

variants

16909 *Classic*



29272 *Aloha*



29273 *Beach*



29274 *City*



29275 *Coral*



29276 *Ice Palace*



29277 *Jungle*



29278 *Mermaid*



29279 *Nature*



29280 *Ocean*



29281 *Pirate*



29282 *Safari*



29283 *Sky*



29284 *Sun*



29285 *Sunny Day*



© 2025 Kaiser & Kühne Freizeitgeräte GmbH - Im Südloh 5 - D-27324 Eystrup - Telefon + 49 (0) 42 54/93 15-0 - Fax +49 (0) 42 54/93 15-24 - info@kaiser-kuehne.com

Kaiser & Kühne

play equipment **Actio 350**
item number **027350000**

variants

29286 *Sweden*



© 2025 Kaiser & Kühne Freizeitgeräte GmbH - Im Südloh 5 - D-27324 Eystrup - Telefon + 49 (0) 42 54/93 15-0 - Fax +49 (0) 42 54/93 15-24 - info@kaiser-kuehne.com