www.kaiser-kuehne.com T. +49 42 54 - 93 15-0

© Kaiser & Kühne Freizeitgeräte D-27324 Eystrup

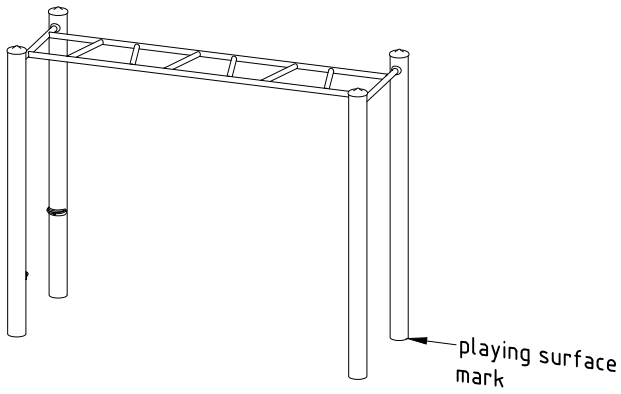

1. Assign a device location considering the space requirements (impact area).
2. Excavate soil for foundations, according to drawing.
   Please note: To achieve maximum stability and a safe installation, a moderate level of soil solubility is required.
3. Pour in a drain layer of gravel of approx. 10 cm thickness between the bottom of the posts and plain base of foundation.
4. Insert reinforcing steel into the corresponding holes of the posts.
5. Place posts type A according to the corresponding number (see foundation layout) into the respective foundation hole. Play level mark (=aluminium blind rivet) complies with the installation depth. Align every post by means of the play level mark facing into the same direction (see detail or foundation layout).
6. **For installation of the pre-assembled components and/or single parts, the screws slightly have to be lubricated with installation paste**!
   Tighten all screws <u>after having aligned</u> all components.
   <u>Screw connections see details in attached list.</u>
7. Grout foundations with compressed concrete C20/25, chamfer and round off the edges, cover the foundations with a surface which meets the requirements for impact attenuation so that the critical fall height of the surfacing is equal to, or greater than, the free height of fall of the equipment (acc. to EN 1176-1).
8. Release for play after concrete foundations have set.
9. According to maintenance instructions, check all screw connections after 4-5 weeks and retighten, if necessary.

   Please ensure that all special tools supplied (e.g. Allen key for secured Allen screws etc.) and all specific documents which are or may be useful for safety management acc. to EN 1176-7 (e.g. invoice, delivery note, order acknowledgement, installation instructions, maintenance instructions) are forwarded to the persons responsible.

Necessarily insert all attachment parts before tightening the screws. It is NOT possible to insert them afterwards.

© Kaiser & Kühne Freizeitgeräte D-27324 Eystrup www.kaiser-kuehne.com T. +49 42 54 - 93 15-0

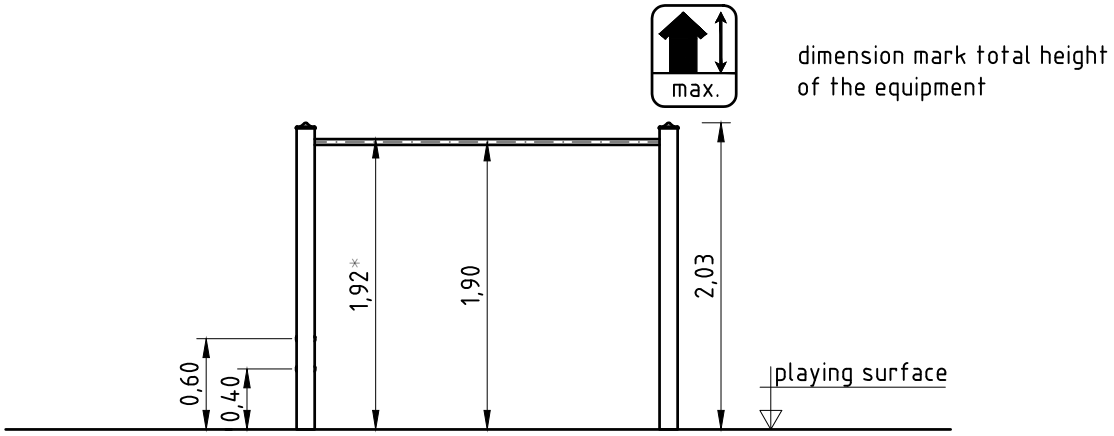



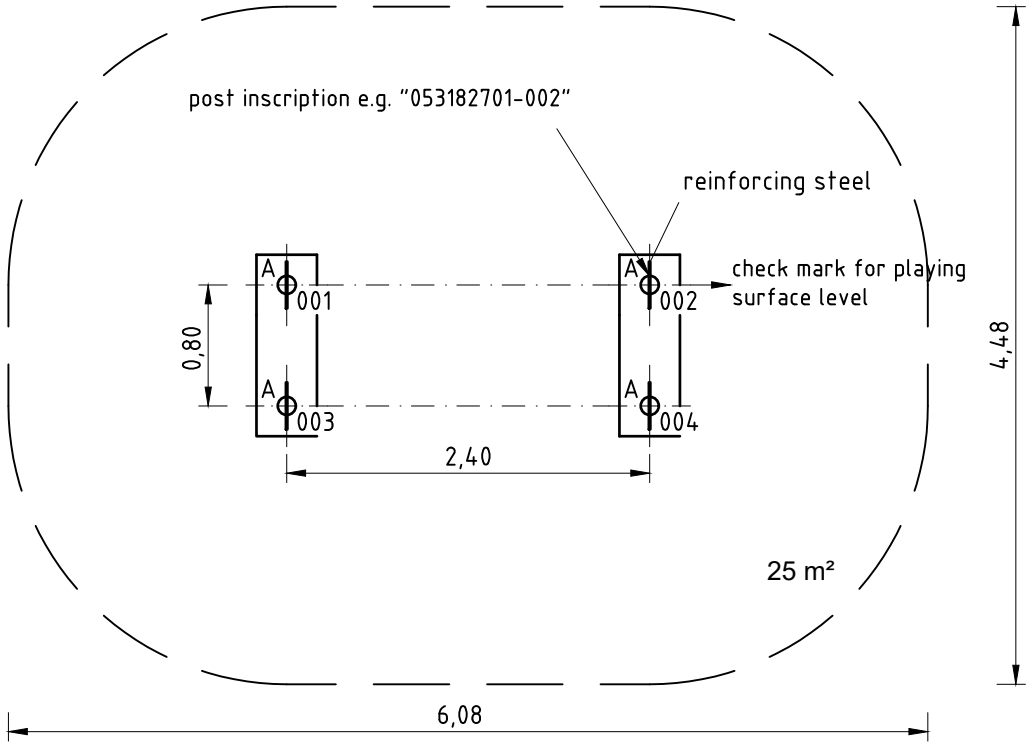

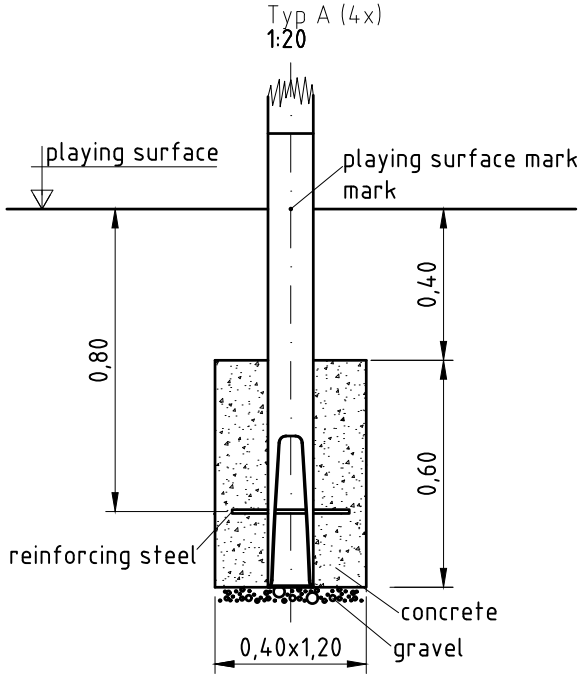

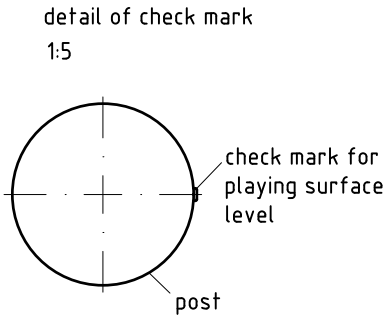

Installation

Item No.	Description	Scale	Date	Page
0-53182-501	Horizontal monkey bars (1,90)	1:50	02/21 EB	2/2

Kaiser & Kühne
PREMIUM PLAYGROUNDS

Item: **1293976**

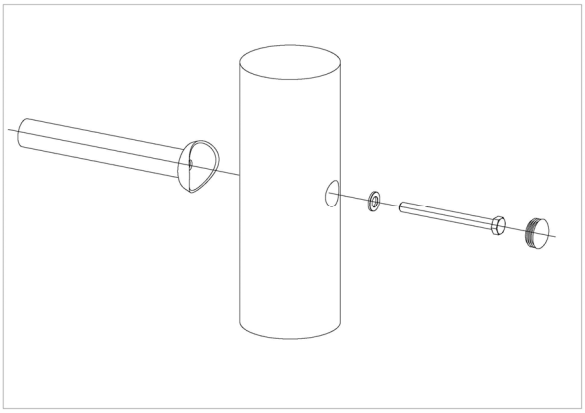

4 x **SFRS1230004** **Standard bolting of climbing poles, ramps etc. to Robinia posts with countersunk holes**

to Robinia posts with countersunk holes

per set	*total*	*item no.*	*material short text*
1	4	3400701	Hexagon head cap screw M12 x 130 DIN931 A2
1	4	3300016	Grey domed plastic cover cap SL 36 G
1	4	3430129	Washer Ø 14 DIN1440 A2

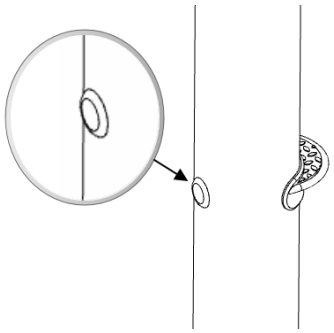

2 x **SFRS1260005**

per set	*total*	*item no.*	*material short text*
1	2	3300016	Grey domed plastic cover cap SL 36 G
1	2	3430129	Washer Ø 14 DIN1440 A2
1	2	3400700	Hexagon head screw M12 x 120 DIN931 A2



4 x **SFES1270007** **Reinforcing steel for tubular pedestals**

per set	*total*	*item no.*	*material short text*
1	4	2130000	reinforcing steel Ø 10 x 310 DIN 488



1 x **SFWZ0000014** **Lubricating metal, bag (4 g)**

per set	*total*	*item no.*	*material short text*
1	1	5300024	Metaflux fitting lubricant 2x4 g